# iACO - Big Gun® Pod

**Wireless Automation for your Handline!**

## Nelson Big Gun® w/Twig® Wireless Control

### Less Labor Moving Handlines vs Traditional Risers & Sprinklers!

- No Wires
- Low Initial Costs
- Quickly Move Big Guns
- Utilize Existing Equipment
- Easily Irrigate Odd Shaped Fields

BOOMBACKS by iACO

**WATER LESS. GROW MORE.**

P.O. BOX 820118 VANCOUVER, WA • P:360.896.9440 • EM:jon@boombacks.com • F:360.896.9438

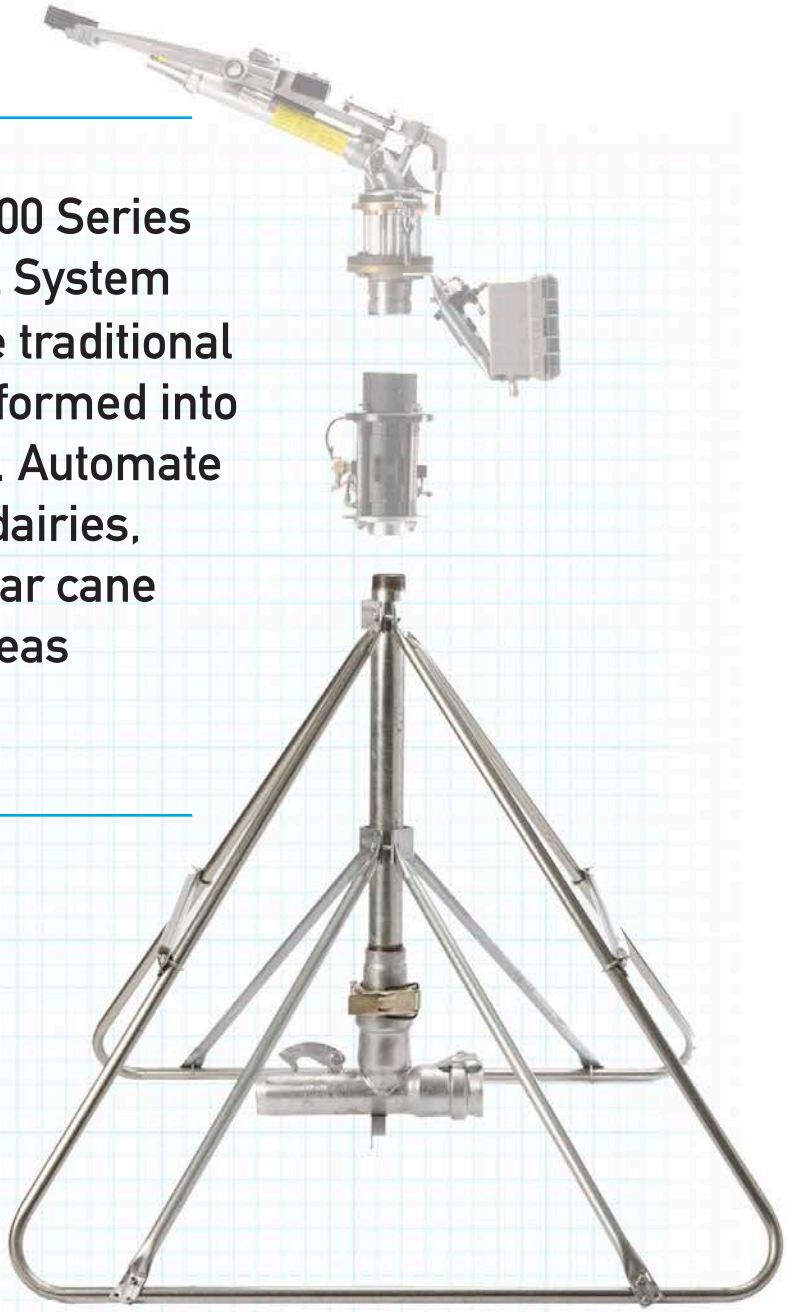

With the introduction of the 1000 Series valve, TWIG® Wireless Control System and IACO Big Gun® Stand the traditional Handline system can be transformed into something quite revolutionary. Automate water application in feedlots, dairies, pastures, berry plantings, sugar cane fields and irregular shaped areas such as pivot corners.

## ADVANTAGES OF AN AUTOMATED BIG GUN® HANDLINE:

### LABOR SAVINGS.

Less moves of Handline pipe utilizing the greater throw distances of Big Guns®. Leave Stands and Valves in place and just move Big Guns® and Twigs® as a single unit – even while the Handline is pressurized!

### CUSTOMIZABLE IRRIGATION RUN TIMES.

A grower can run some Big Guns® in a field longer than others. For example, being able to run a gun on a south facing sandy slope more frequently than a gun on a loamy soil bottom area of the same field.

### SIMPLE AND RELIABLE ZONE CYCLING.

Irrigate overnight if necessary - no need to monitor system.

### EASY INTEGRATION.

Big Guns® can be blended into the end gun pattern of a center pivot to allow pivot corners to be farmed easily with a minimum of field obstacles.



P.O. BOX 820118 VANCOUVER, WA • P:360.896.9440 • EM:JON@BOOMBACKS.COM • F:360.896.9438